SAS Series

Tender / Bid specifications :

Specifications for Non-Motorized Projection Screen:

- Screen Size: 1580mm x 1580mm to 2440mm x 2440mm
- Screen Gain: 1.2
- Viewing Angle: 160 degrees viewing cone
- Screen Materials: Matte White with fibreglass coating,

  Flame Retardant and fungus resistant
- Construction & Design: Heavy Duty aluminium casing with powder-coating finishing

  Strong tensioning device to ensure flat screen

  Auto-Gear Mechanism for precise and effective stopping at desired height

  Auto-Gear Mechanism to allow screen roll up smoothly and steady like a motorized screen
- Installation: Come with universal brackets for wall or ceiling mounting

  Screen position can be adjusted horizontally even after installed

Dimension of SAS Series Screen

Casing Sectional View

SAS-1515 to SAS-2424

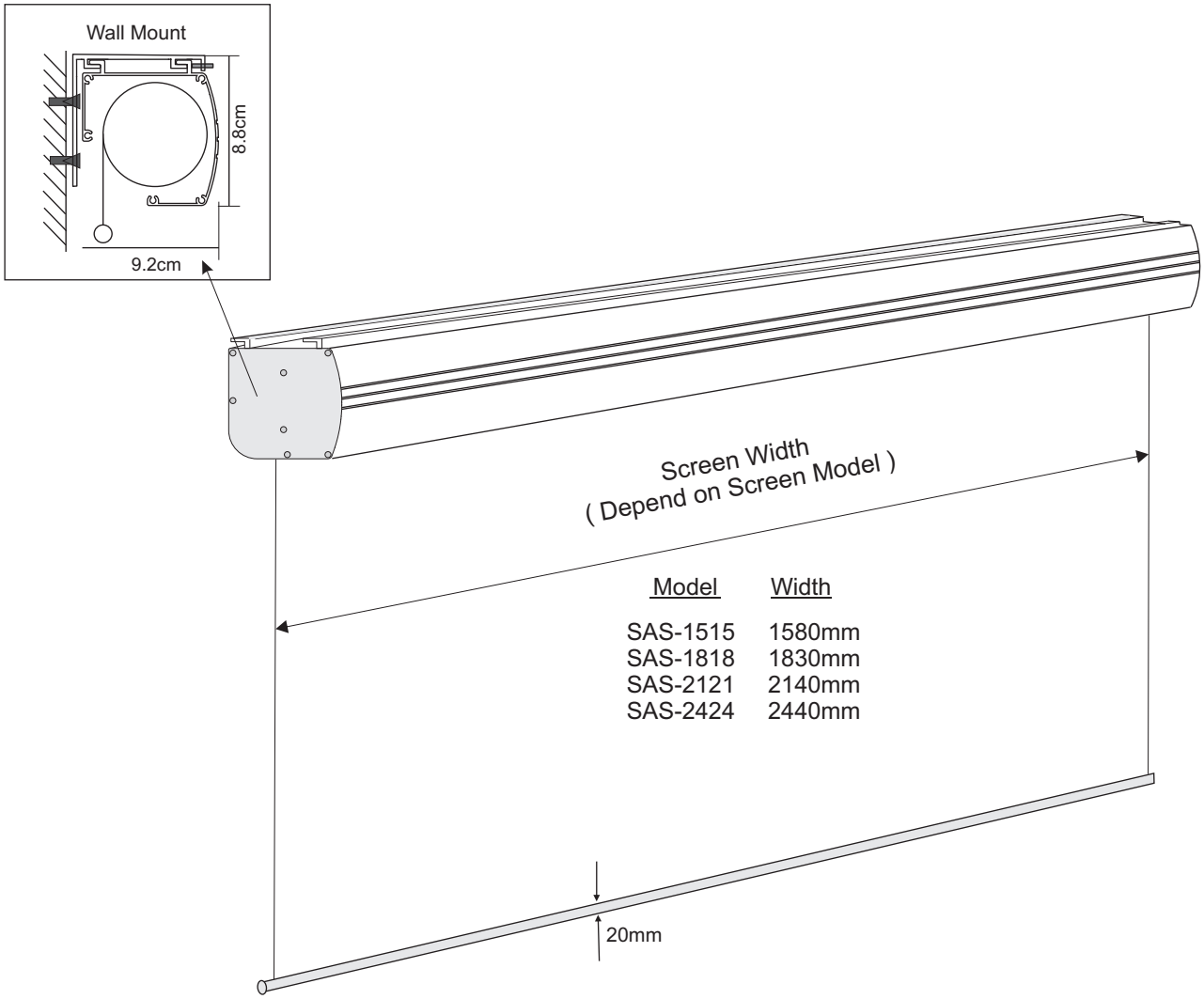

Model	Width
SAS-1515	1580mm
SAS-1818	1830mm
SAS-2121	2140mm
SAS-2424	2440mm

Screen Casing Width = Screen Width + 60mm (SAS-1515 to SAS-1818)

Screen Casing Width = Screen Width + 65mm (SAS-2121)

Screen Casing Width = Screen Width + 72mm (SAS-2424)

Pelmet Mounting: Recommended Pelmet Size

SAS Series (Standard Size)

Recommended Pelmet Width = Screen Casing Width + 100mm

Screen Casing Width = Screen Width + 65mm (SAS-2121)
Screen Casing Width = Screen Width + 72mm (SAS-2424)

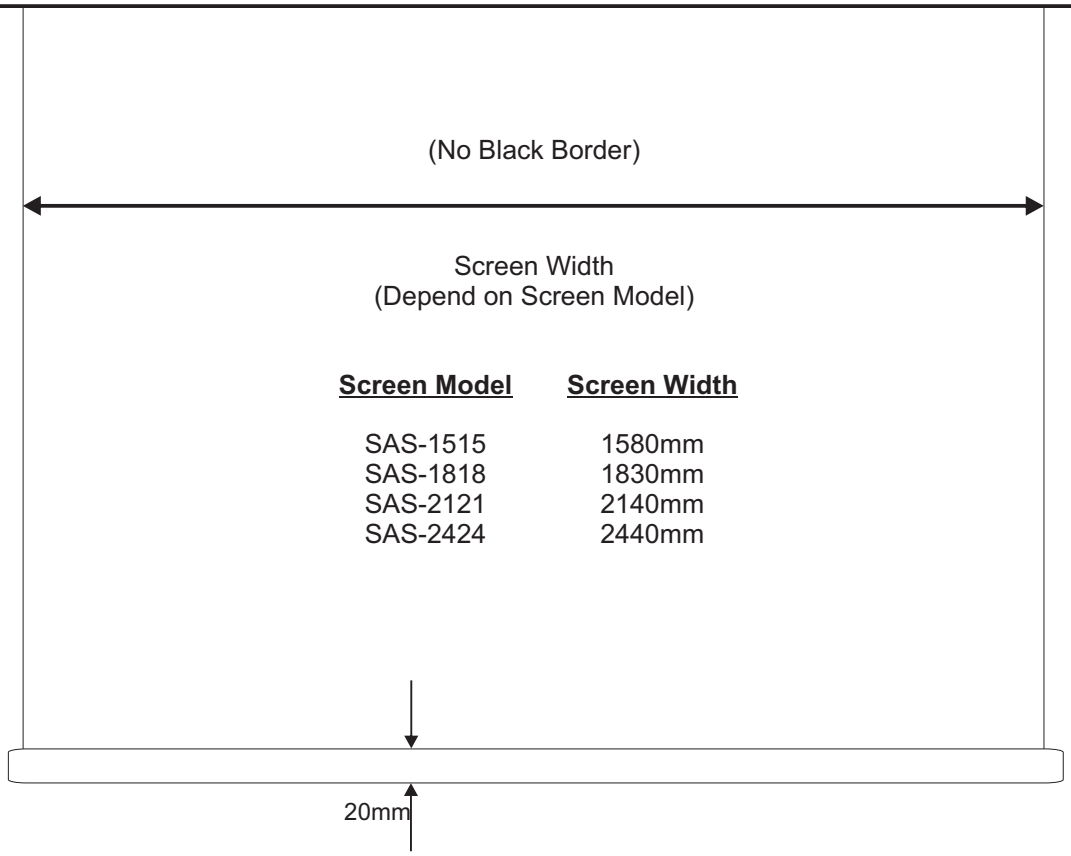

Screen Model	Screen Width
SAS-1515	1580mm
SAS-1818	1830mm
SAS-2121	2140mm
SAS-2424	2440mm

Pelmet depth and height (Minimum)

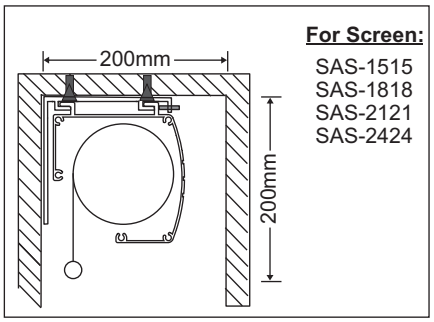

For Screen:
SAS-1515
SAS-1818
SAS-2121
SAS-2424

Pelmet Mounting: Recommended Pelmet Size

SAS Series (Standard Size)

Recommended Pelmet Width = Screen Casing Width + 100mm

Screen Casing Width = Screen Width + 65mm (SAS-2121)
Screen Casing Width = Screen Width + 72mm (SAS-2424)

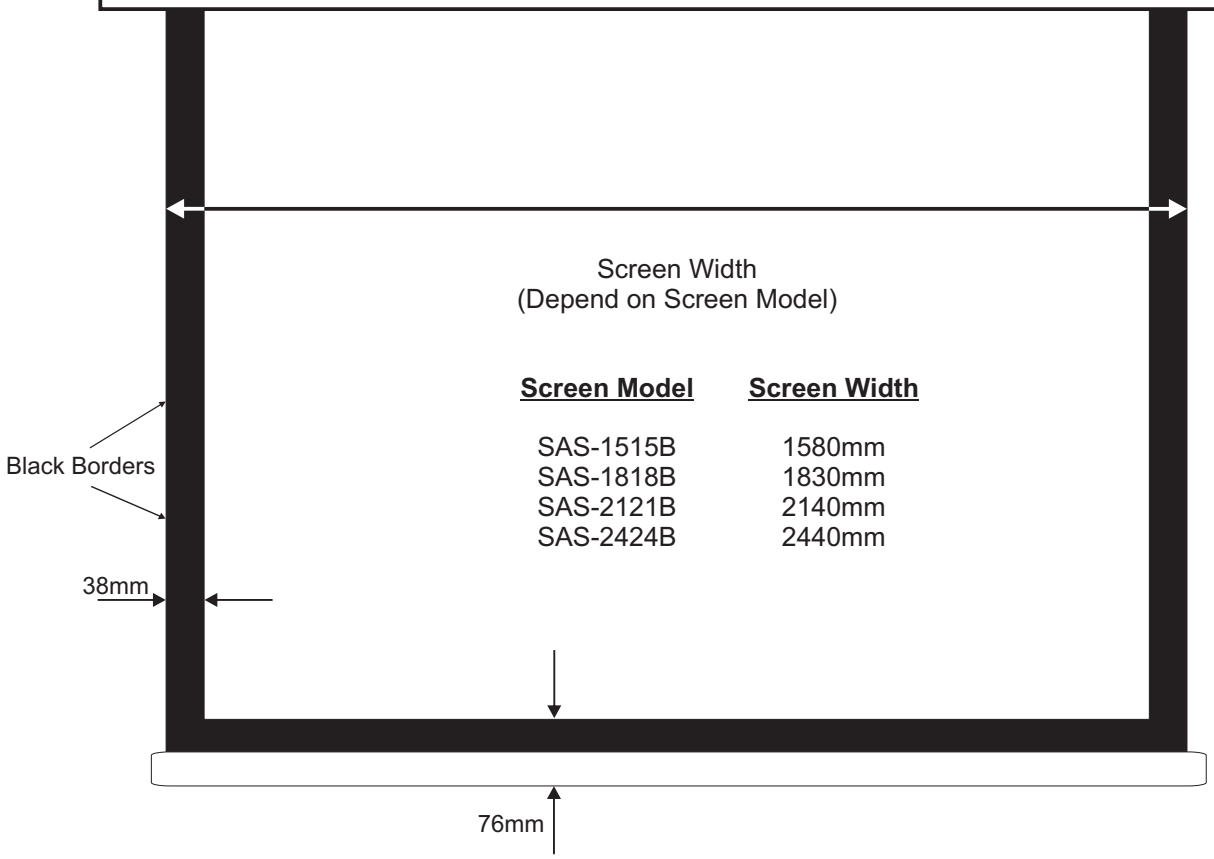

Screen Model	Screen Width
SAS-1515B	1580mm
SAS-1818B	1830mm
SAS-2121B	2140mm
SAS-2424B	2440mm

Pelmet depth and height (Minimum)

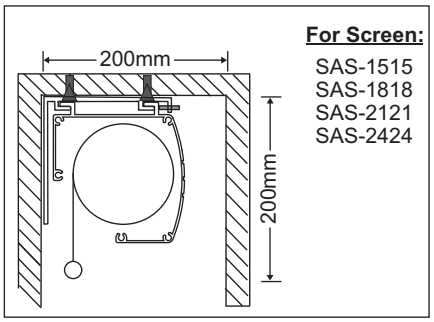

For Screen:
SAS-1515
SAS-1818
SAS-2121
SAS-2424

Pelmet Mounting: Recommended Pelmet Size

SAS Series (HDTV Format)

Recommended Pelmet Width = Screen Casing Width + 100mm

Screen Casing Width = Screen Width + 65mm (SAS-2212H)
Screen Casing Width = Screen Width + 72mm (SAS-2414H)

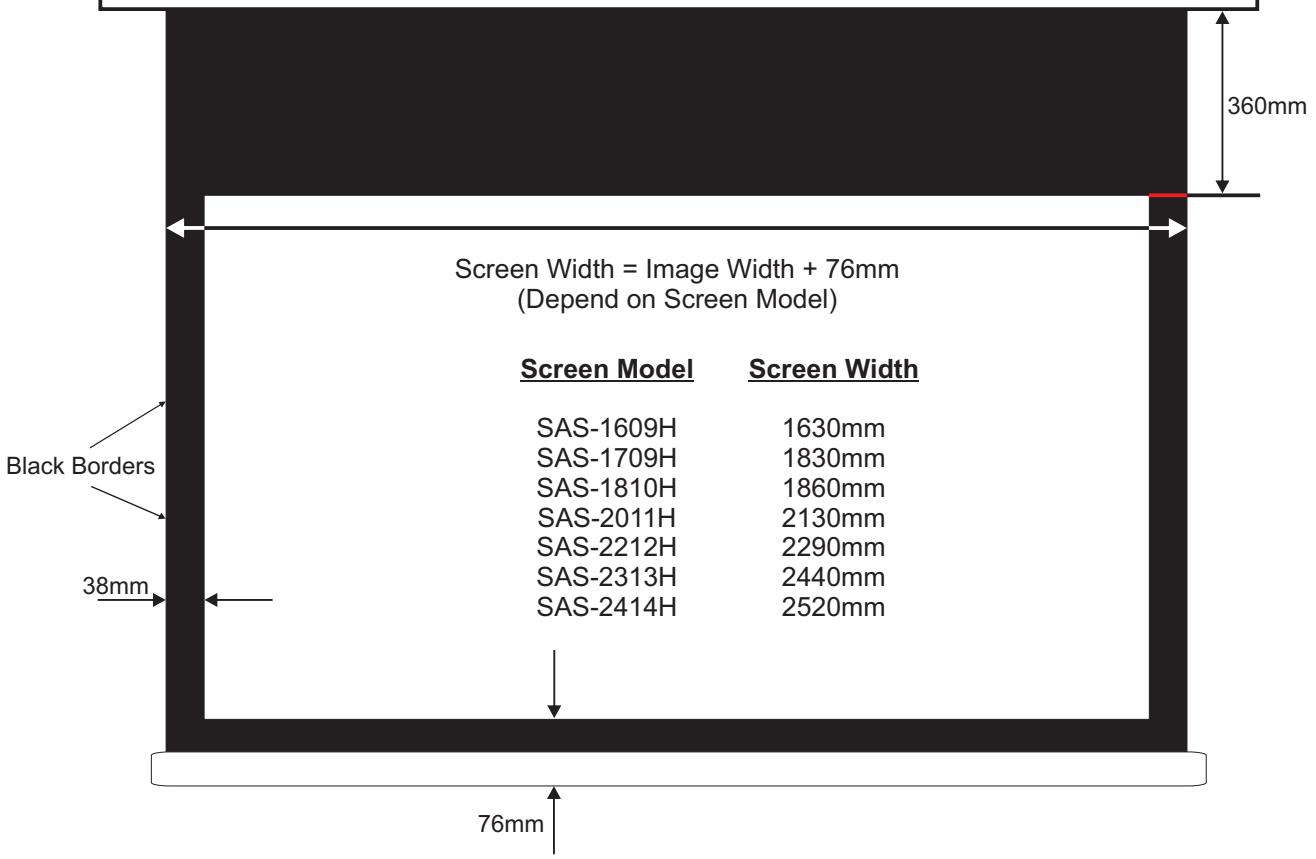

Screen Width = Image Width + 76mm
(Depend on Screen Model)

Screen Model	Screen Width
SAS-1609H	1630mm
SAS-1709H	1830mm
SAS-1810H	1860mm
SAS-2011H	2130mm
SAS-2212H	2290mm
SAS-2313H	2440mm
SAS-2414H	2520mm

Pelmet depth and height (Minimum)

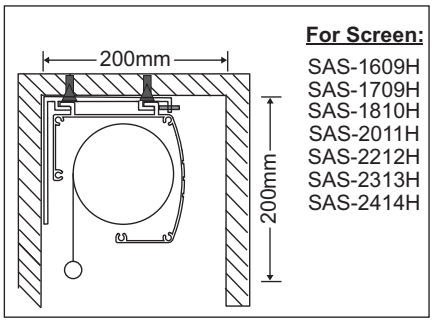

For Screen:
SAS-1609H
SAS-1709H
SAS-1810H
SAS-2011H
SAS-2212H
SAS-2313H
SAS-2414H

Pelmet Mounting: Recommended Pelmet Size

SAS Series (Video Format)

Recommended Pelmet Width = Screen Casing Width + 100mm

Screen Casing Width = Screen Width + 65mm (SAS-2217V)
Screen Casing Width = Screen Width + 72mm (SAS-2418V)

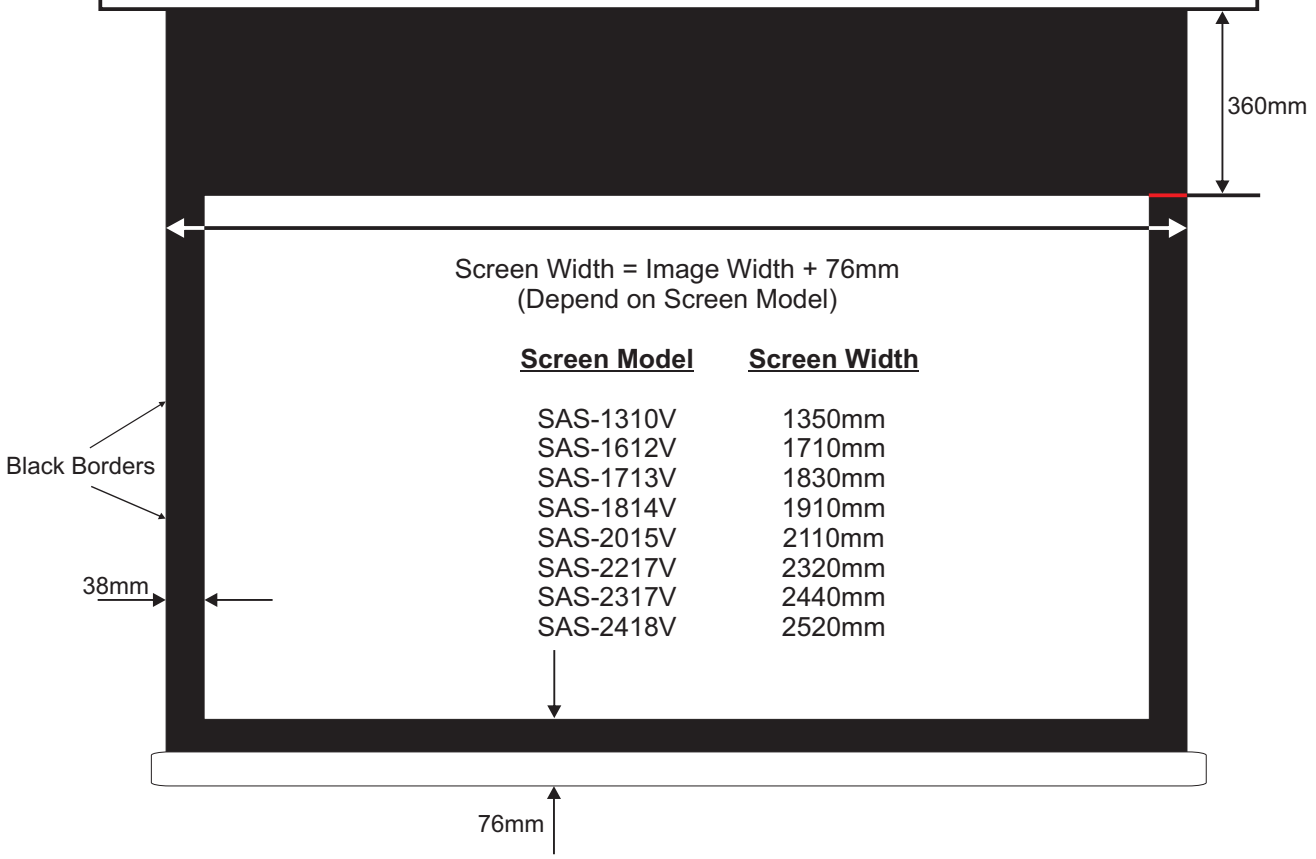

Screen Width = Image Width + 76mm
(Depend on Screen Model)

Screen Model	Screen Width
SAS-1310V	1350mm
SAS-1612V	1710mm
SAS-1713V	1830mm
SAS-1814V	1910mm
SAS-2015V	2110mm
SAS-2217V	2320mm
SAS-2317V	2440mm
SAS-2418V	2520mm

Pelmet depth and height (Minimum)

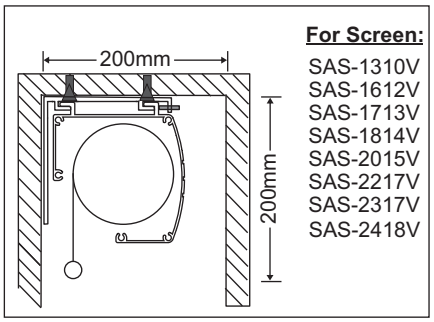

For Screen:
SAS-1310V
SAS-1612V
SAS-1713V
SAS-1814V
SAS-2015V
SAS-2217V
SAS-2317V
SAS-2418V